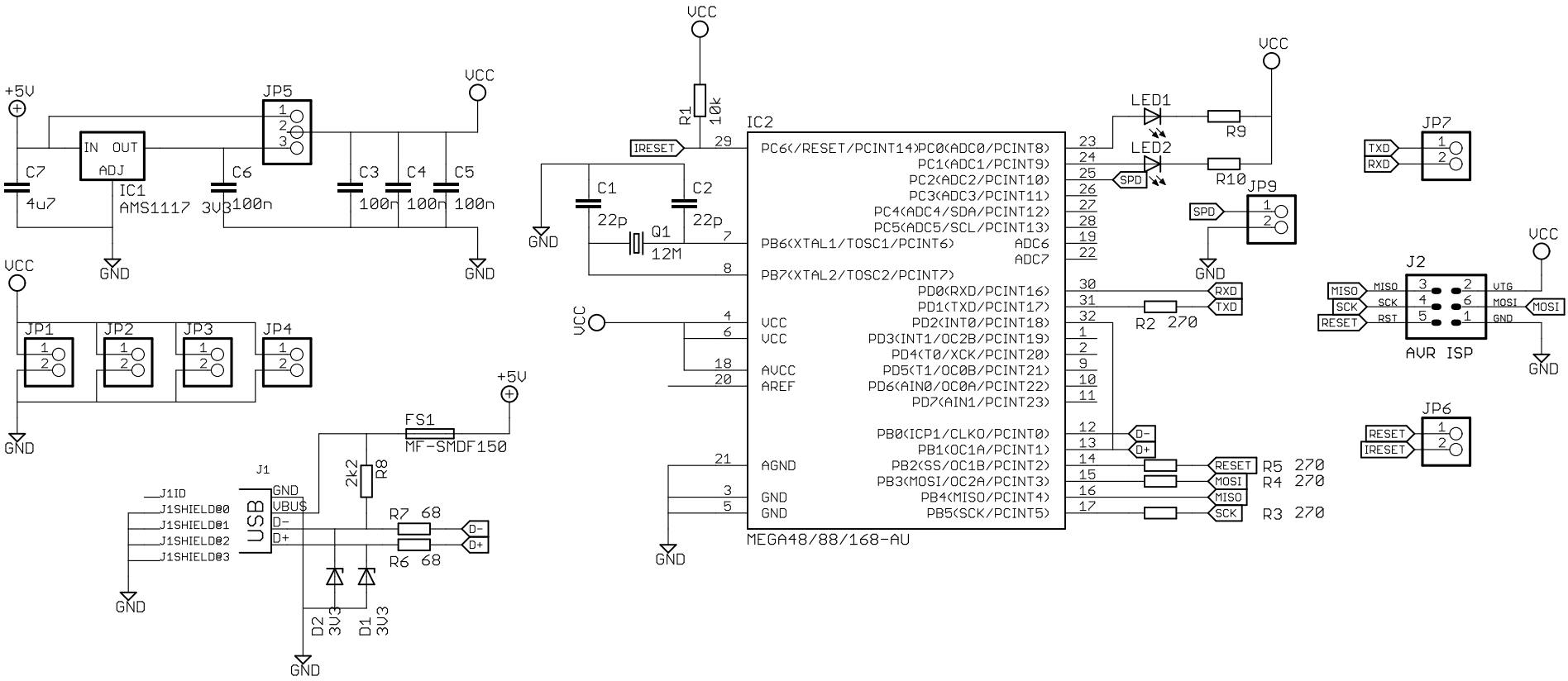
+5V
JP5
VCC
IN OUT
ADJ
C7
4u7
IC1
AMS1117 3V3
C6
100n
C3
100n
C4
100n
C5
100n
GND
VCC
JP1
JP2
JP3
JP4
GND
+5V
FS1
MF-SMDF150
J1
2k2
R8
J1ID
J1SHIELD00
J1SHIELD01
J1SHIELD02
J1SHIELD03
USB
GND
VBUS
D-
D+
R7 68
R6 68
D2
3V3
D1
3V3
GND
VCC
R1
10k
IC2
IRESET
29
C1
22p
C2
22p
GND
Q1
12M
7
8
VCC
4
6
18
20
AVCC
AREF
21
AGND
3
5
GND
GND
PC6(/RESET/PCINT14)PC0(ADC0/PCINT8)
PC1(ADC1/PCINT9)
PC2(ADC2/PCINT10)
PC3(ADC3/PCINT11)
PC4(ADC4/SDA/PCINT12)
PC5(ADC5/SCL/PCINT13)
PB6(XTAL1/TOSC1/PCINT6)
ADC6
ADC7
PB7(XTAL2/TOSC2/PCINT7)
PD0(RXD/PCINT16)
PD1(TXD/PCINT17)
PD2(INT0/PCINT18)
PD3(INT1/OC2B/PCINT19)
PD4(T0/XCK/PCINT20)
PD5(T1/OC0B/PCINT21)
PD6(AIN0/OC0A/PCINT22)
PD7(AIN1/PCINT23)
PB0(ICP1/CLKO/PCINT0)
PB1(OC1A/PCINT1)
PB2(SS/OC1B/PCINT2)
PB3(MOSI/OC2A/PCINT3)
PB4(MISO/PCINT4)
PB5(SCK/PCINT5)
MEGA48/88/168-AU
23
24
25
26
27
28
19
22
30
31
32
1
2
9
10
11
12
13
14
15
16
17
VCC
LED1
R9
LED2
R10
SPD
JP9
SPD
GND
RXD
TXD
R2 270
D-
D+
RESET
MOSI
MISO
SCK
R5 270
R4 270
R3 270
JP7
TXD
RXD
VCC
J2
MISO
SCK
RESET
MISO
SCK
RST
VTG
MOSI
GND
MOSI
AVR ISP
GND
JP6
RESET
IRESET