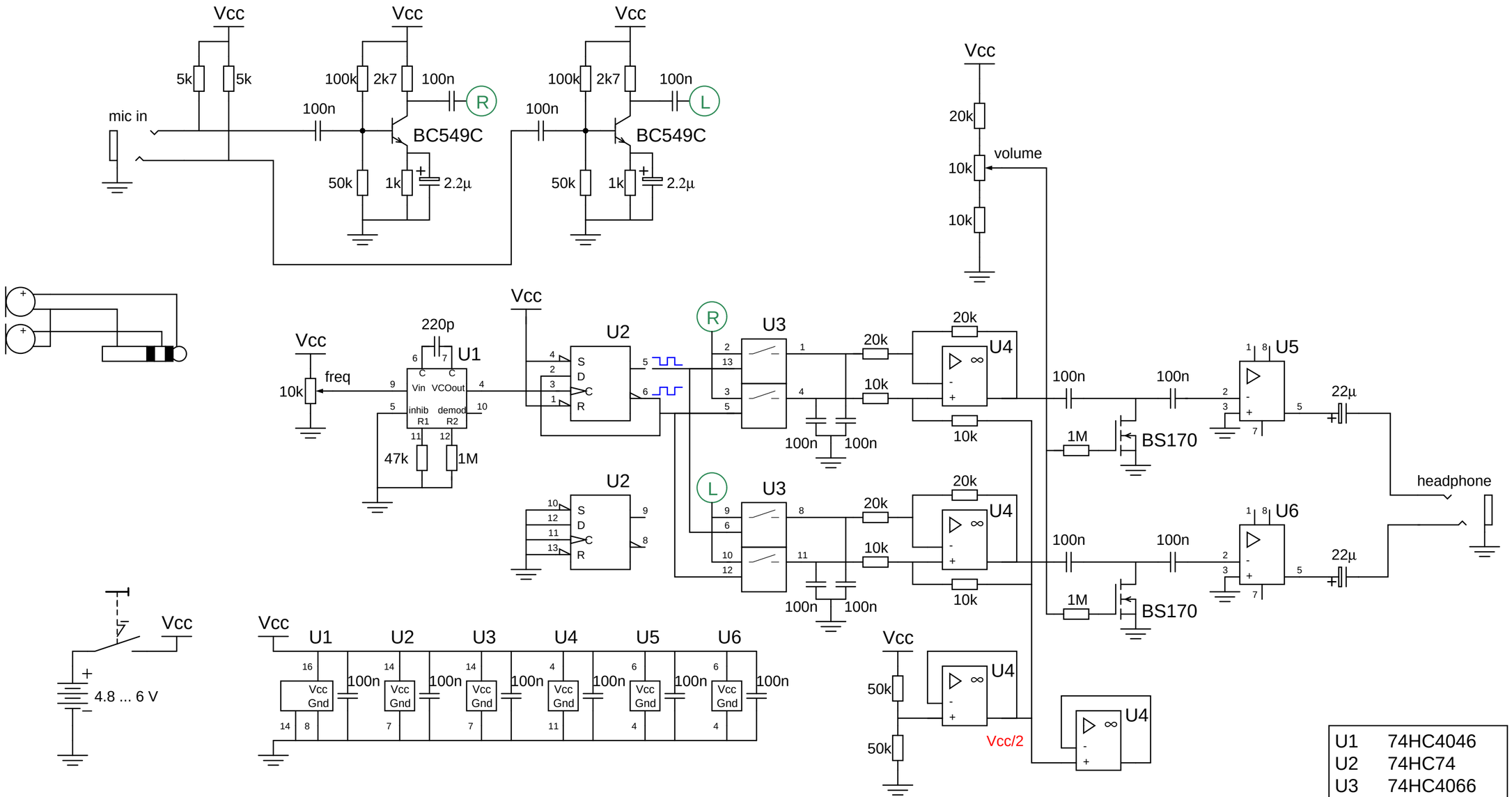

U1	74HC4046
U2	74HC74
U3	74HC4066
U4	LM324
U5	LM386
U6	LM386

			date	2008-08-11		Sciencetronics	bat detector		
			author	UZ					
			check					page	pages
revision	date	name	norm		original	repl.for	repl.by	1	1